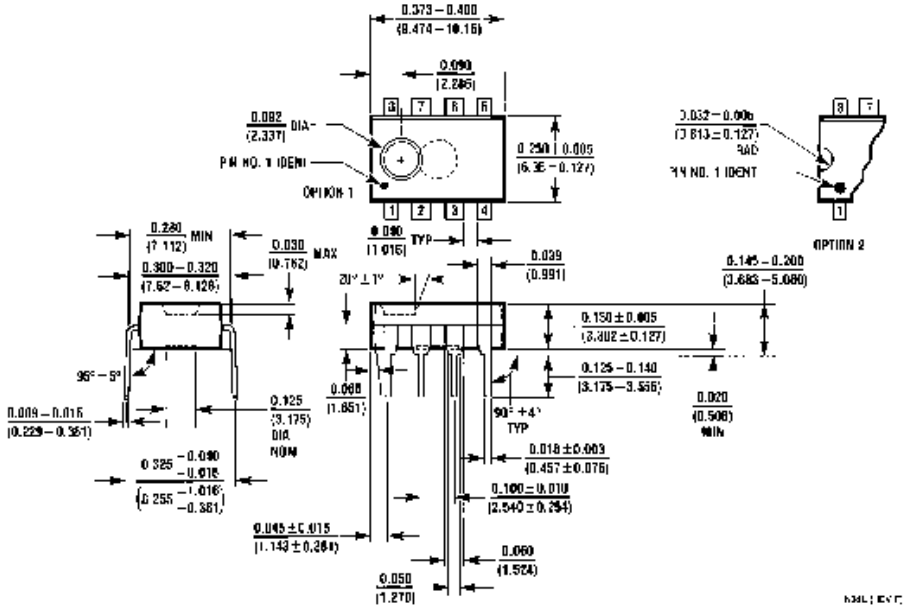
0.373 – 0.400
(9.474 – 10.16)
0.090
(2.286)
0.092
(2.337) DIA
PIN NO. 1 IDENT
OPTION 1
0.250 ± 0.005
(6.35 ± 0.127)
0.032 – 0.006
(0.813 ± 0.127)
RAD
PIN NO. 1 IDENT
OPTION 2
0.280
(7.112) MIN
0.300 – 0.320
(7.62 – 8.128)
0.030
(0.762) MAX
0.090
(1.016) TYP
0.039
(0.991)
0.145 – 0.200
(3.683 – 5.080)
20° ± 1°
0.150 ± 0.005
(3.302 ± 0.127)
95° – 5°
0.125 – 0.140
(3.175 – 3.556)
0.068
(1.651)
0.009 – 0.016
(0.229 – 0.381)
0.125
(3.175)
DIA
NOM
90° + 4°
TYP
0.020
(0.508)
MIN
0.018 ± 0.003
(0.457 ± 0.076)
0.325 −0.090 −0.015
(8.255 −1.016 −0.381)
0.100 ± 0.010
(2.540 ± 0.254)
0.045 ± 0.015
(1.143 ± 0.381)
0.060
(1.524)
0.050
(1.270)

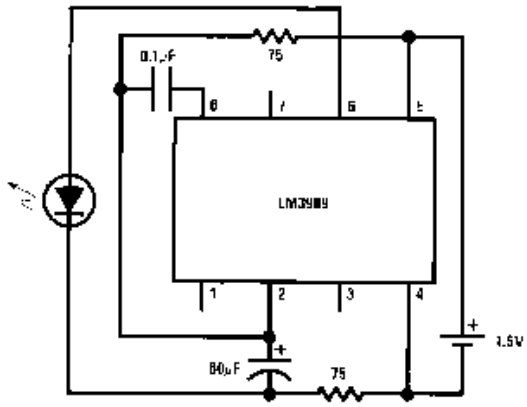
0.1µF
75
LM3909
1
2
3
4
5
6
7
8
80µF
75
1.5V

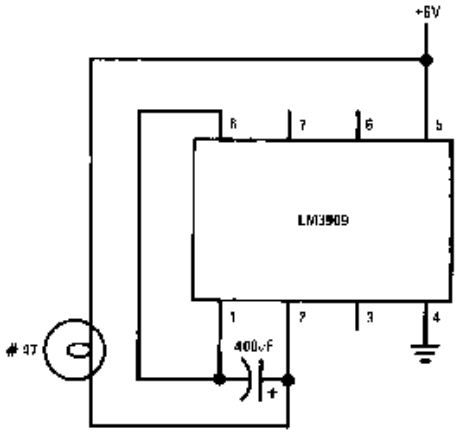
+6V
LM3909
1
2
3
4
5
6
7
8
47
400µF

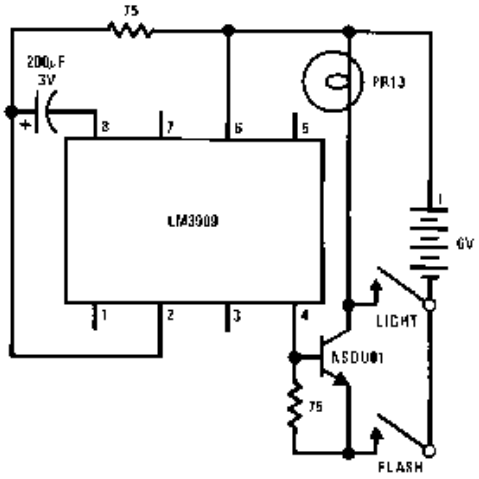
75
200µF
3V
PR13
LM3909
1
2
3
4
5
6
7
8
6V
LIGHT
NSDU01
75
FLASH

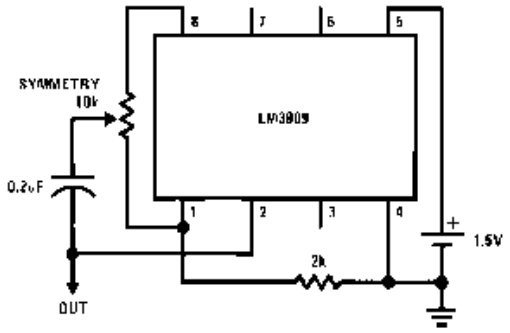
SYMMETRY
10k
0.2uF
OUT
LM3909
2k
1.5V

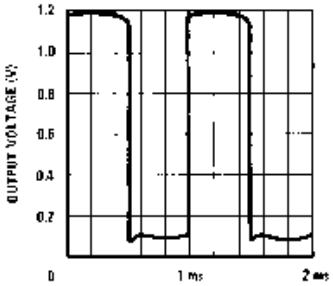
OUTPUT VOLTAGE (V)
1.2
1.0
0.8
0.6
0.4
0.2
0
1 ms
2 ms

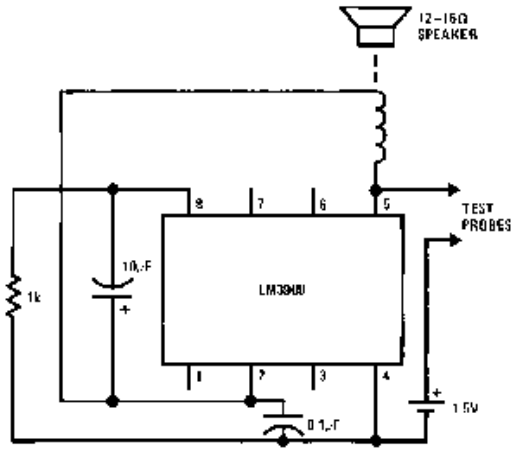
12–16Ω
SPEAKER
TEST
PROBES
1k
10µF
LM3909
0.1µF
1.5V

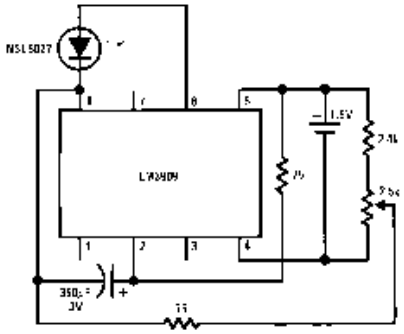
NSL5027
LM3909
1.5V
350µF
3V

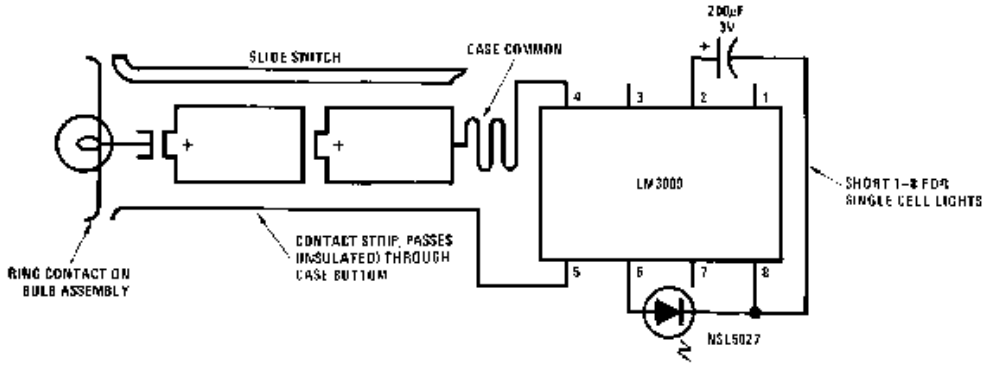
200µF
3V
SLIDE SWITCH
CASE COMMON
LM3909
SHORT 1-8 FOR
SINGLE CELL LIGHTS
RING CONTACT ON
BULB ASSEMBLY
CONTACT STRIP PASSES
(INSULATED) THROUGH
CASE BOTTOM
NSL5027

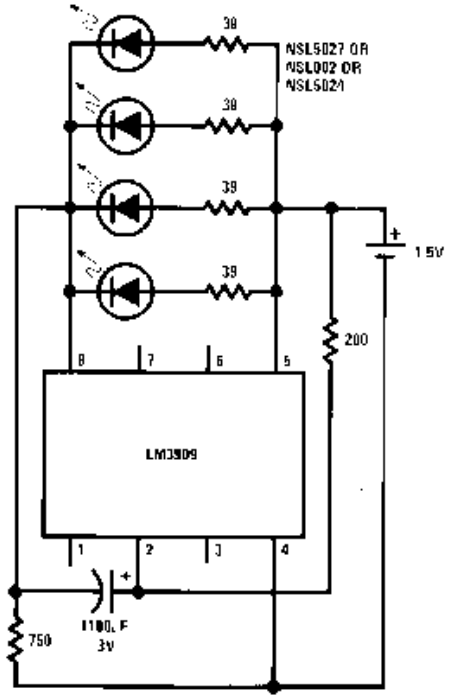
39
NSL5027 OR
NSL002 OR
NSL5021
1.5V
200
LM3909
750
1100µF
3V

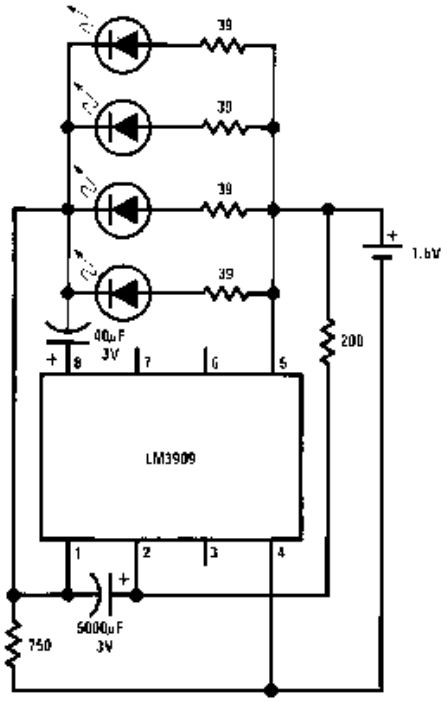
39
1.6V
40µF
3V
200
LM3909
750
5000µF
3V

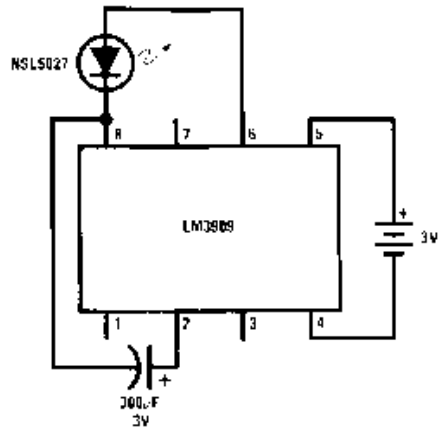
NSL5027
8
7
6
5
LM3909
3V
1
2
3
4
100µF
3V

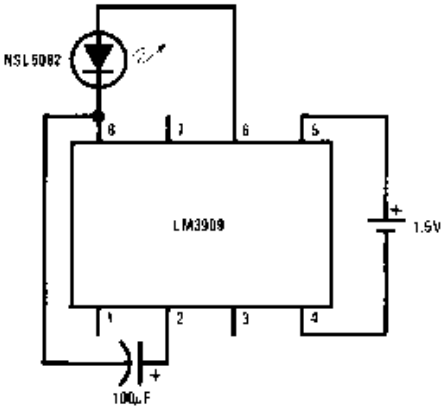
NSL5082
8
7
6
5
LM3909
1.5V
1
2
3
4
100µF

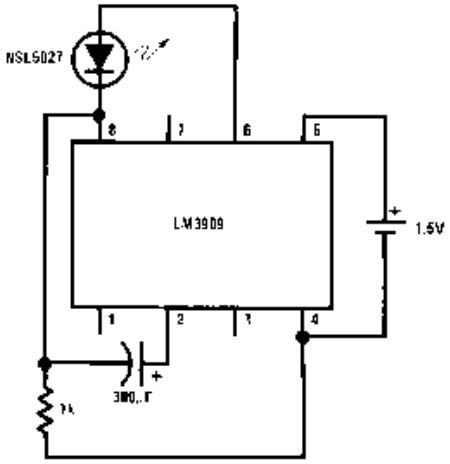
NSL5027
8
7
6
5
LM3909
1.5V
1
2
3
4
1k

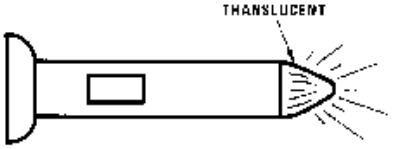
THANSLUCENT

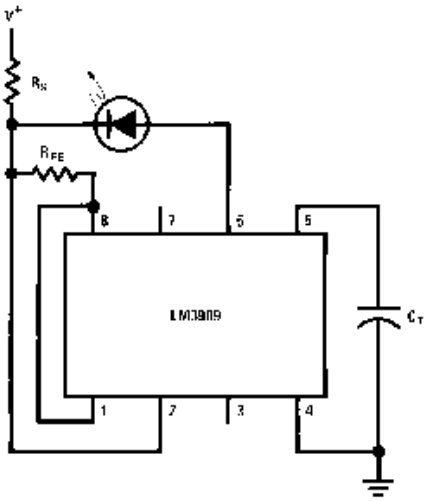
V+
RS
RFE
8
7
6
5
LM3909
CT
1
2
3
4

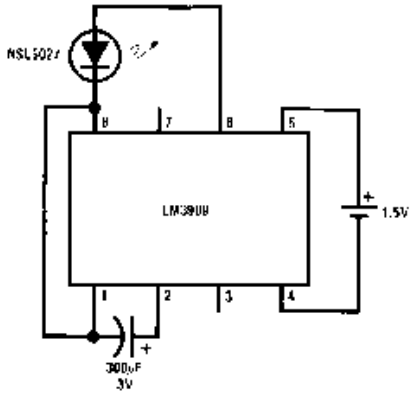
NSL5021
8
7
6
5
LM3909
1.5V
1
2
3
4
300µF
3V

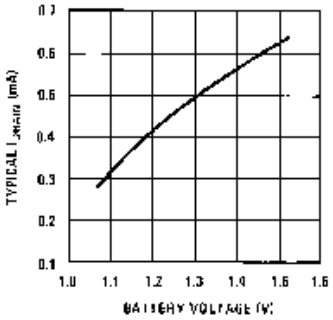
0.7
0.6
0.5
0.4
0.3
0.2
0.1
1.0
1.1
1.2
1.3
1.4
1.5
1.6
BATTERY VOLTAGE (V)

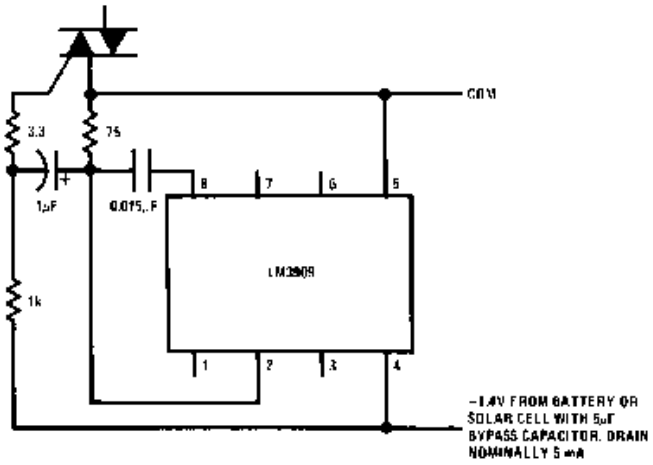
COM
3.3
75
1µF
0.015µF
8
7
6
5
LM2909
1k
1
2
3
4
–1.4V FROM BATTERY OR
SOLAR CELL WITH 5µF
BYPASS CAPACITOR. DRAIN
NOMINALLY 5 mA
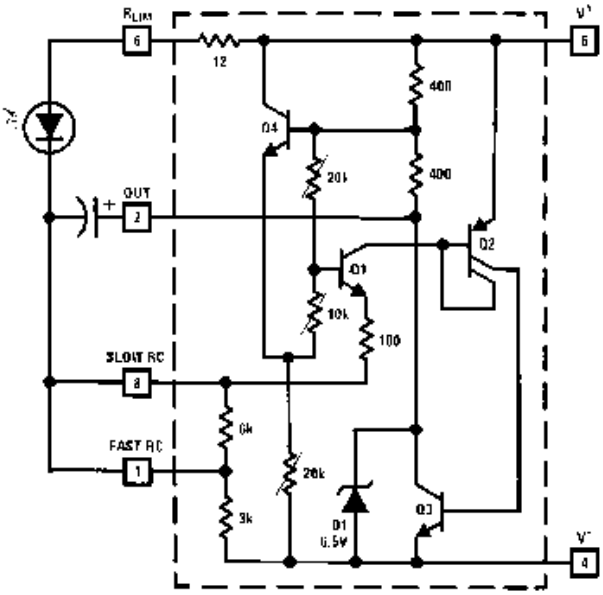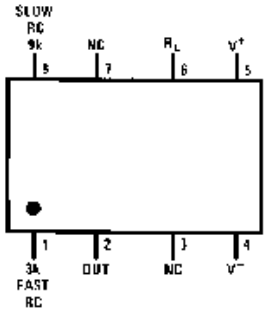
National Semiconductor